**Production Size Specification** **TRICORP**

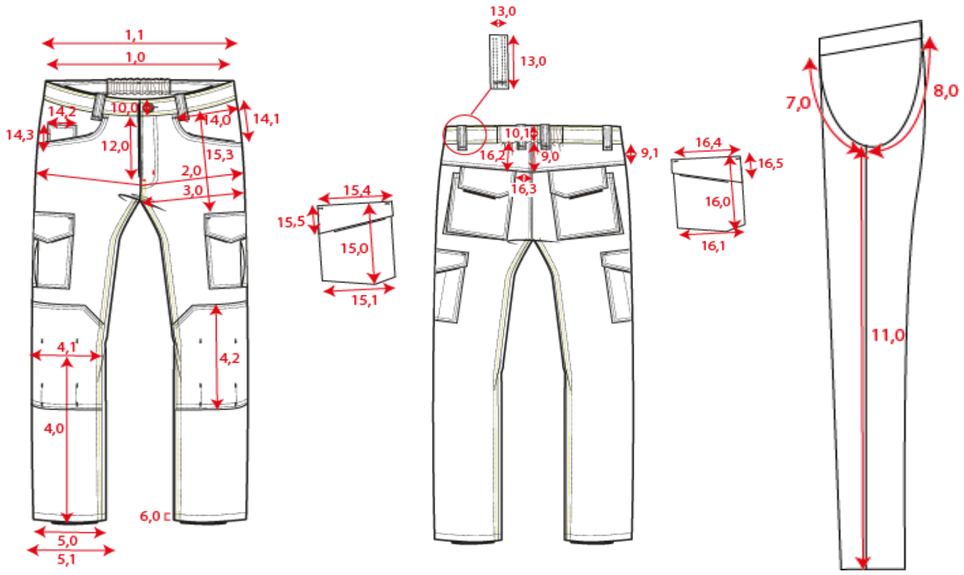


Sketch is for how to measure NOT for style

| | |
|---|---|
| **Stylenumber:** | 502023 |
| **Styledescription:** | Werkbroek Twill |
| **Productgroup:** | Trousers |
| **Label:** | Workwear |
| **Sexe:** | Men |
| **Fabric Description:** | Twill mechanical stretch |
| **Compositon:** | 65% Polyester/ 35% Cotton mechanical stretch |
| **Weight:** | 245 gm2 |
| **Color:** | Red, Navy,Black, Royal blue, Dark grey, Army |
| **Spec from batch nr:** | |
| **Date:** | 3-12-2019 |

| | | **21** | **22** | **23** | **24** | **25** | **26** | **27** | | | | | | | **Tol** | | | | |
|---|---|---|---|---|---|---|---|---|---|---|---|---|---|---|---|---|---|---|---|
| 1,0 | 1/2 Waist relaxed | 35 | 37,5 | 40 | 42,5 | 45 | 47,5 | 50 | | | | | | | 1,0 | | | | |
| 2,0 | 1/2 Hip (under zip) | 45 | 47,5 | 50 | 52,5 | 55 | 57,5 | 60 | | | | | | | 1,0 | | | | |
| 11,0 | Inseam, short | 78 | 78 | 78 | 78 | 78 | 78 | 78 | | | | | | | 0,5 | | | | |
| | | | | | | | | | | | | | | | | | | | |
| | | **42** | **44** | **46** | **48** | **50** | **52** | **54** | **56** | **58** | **60** | **62** | **64** | **66** | | | | | |
| 1,0 | 1/2 Waist relaxed | 35 | 37,5 | 40 | 42,5 | 45 | 47,5 | 50 | 52,5 | 55 | 57,5 | 61,5 | 65,5 | 69,5 | 1,0 | | | | |
| 2,0 | 1/2 Hip (under zip) | 45 | 47,5 | 50 | 52,5 | 55 | 57,5 | 60 | 62,5 | 65 | 67,5 | 71,5 | 75,5 | 79,5 | 1,0 | | | | |
| 11,0 | Inseam, normal | 83 | 83 | 83 | 83 | 83 | 83 | 83 | 83 | 83 | 83 | 83 | 83 | 83 | 0,5 | | | | |
| | | | | | | | | | | | | | | | | | | | |
| | | **43** | **45** | **47** | **49** | **51** | **53** | **55** | | | | | | | | | | | |
| 1,0 | 1/2 Waist relaxed | 35 | 37,5 | 40 | 42,5 | 45 | 47,5 | 50 | | | | | | | 1,0 | | | | |
| 2,0 | 1/2 Hip (under zip) | 45 | 47,5 | 50 | 52,5 | 55 | 57,5 | 60 | | | | | | | 1,0 | | | | |
| 11,0 | Inseam, long | 88 | 88 | 88 | 88 | 88 | 88 | 88 | | | | | | | 0,5 | | | | |
| | | | | | | | | | | | | | | | | | | | |